EN

tedee

INSTALLATION GUIDE AND USER MANUAL

tedee lock TLV1.0 and TLV1.1

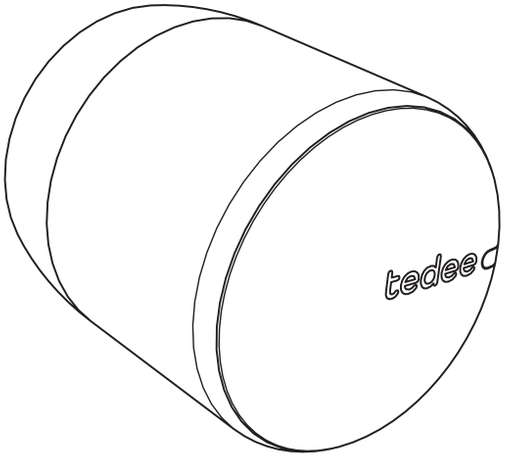

Read installation guide and user manual
and learn how to use your device in a safe and proper manner.

table of contents

- **table of contents** ..... **Page 2**
- **quick start with tedee lock** ..... **Page 3**
- **safety information** ..... **Page 4**
  - safety guidelines / warnings ..... Page 4
  - charging and maintenance guidelines/warnings ..... Page 5
- **set of items – what's in the box?** ..... **Page 7**
- **activation code** ..... **Page 8**
- **setup - 3 easy steps** ..... **Page 9**
  - step 1: install tedee lock ..... Page 9
  - step 2: download tedee app, create new account, and log in ..... Page 12
  - step 3: use tedee app to activate and calibrate your tedee lock ..... Page 13
- **charging tedee lock** ..... **Page 14**
- **deinstallation of tedee lock** ..... **Page 15**
- **factory reset** ..... **Page 16**
- **additional and technical information** ..... **Page 17**
  - technical specifications ..... Page 17
  - radio frequency ..... Page 18
  - micro USB Cable ..... Page 18
  - power supply, battery and charging ..... Page 19
  - software ..... Page 19
  - LED signals ..... Page 20
  - legal / environmental notes ..... Page 22
  - warranty ..... Page 22
  - technical support ..... Page 23
- **your activation code** ..... **Page 24**

quick start with tedee lock

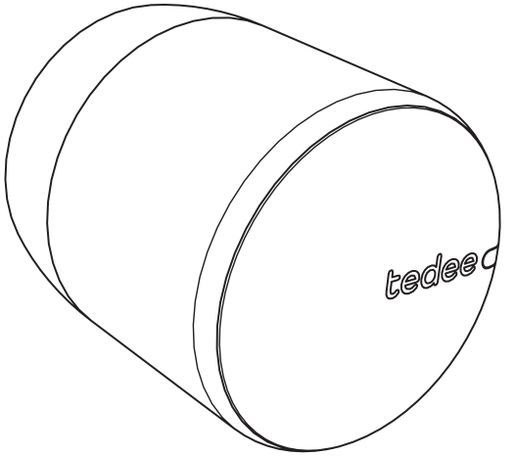

Tedee lock is a smart door lock that can be fitted to GERDA modular cylinder or any other euro-profile cylinder using a special adapter.

Tedee smart lock allows you to unlock the door, share access, and check all activities remotely.

This booklet will give you an overview of the basic features of tedee lock and will help you walk through the setup in three easy steps.

tedee lock setup - go to page 9

3 easy steps

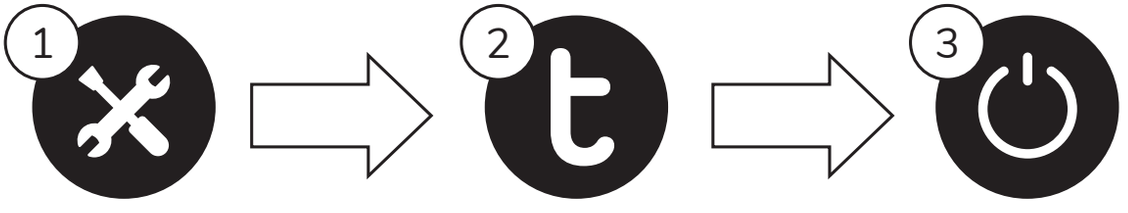

INSTALL
tedee lock

GET
tedee app

ACTIVATE
and CALIBRATE
your lock

safety information

WARNING: Read all safety guidelines and warnings. Failure to follow the guidelines and warnings may result in electric shock, fire, and / or serious injury.

safety guidelines / warnings

Do not



- Do not open, modify or disassemble your device.
- Do not self-service any part of the device.
- Do not immerse device in any liquid or expose it to moisture.
- Do not use the device near extreme heat source or open fire.
- Do not use the device in an environment of a high humidity or dust levels, as well as pollution degree II.
- Do not insert any conductive objects in device openings and gaps.
- The device should not be used by children without adult supervision.
- The device cannot be used as the only mean of access control to rooms or premises that require increased access control.

Do



- If repairs are required, please contact tedee technical support.
- Use only power supply devices provided or recommended by tedee.
- Read the installation guide and learn how to start working with your device, how to add it to your tedee app and how to pair it with other tedee devices. You can also follow the link: www.tedee.com/installation-guide

---

Moving parts



- The device contains moving parts. When operating the device remotely, it is not recommended to keep your hands on the housing.

Other information

- This device is safe to use under normal and reasonably foreseeable misuse operating code of conduct. If you notice any signs of errors or hardware malfunction, contact tedee technical support for help. In such case this device should be returned to tedee for necessary repairs under the warranty conditions. Any changes or modifications to the device's hardware or software which are not approved, recommended, or provided by tedee may void your warranty.

charging and maintenance guidelines/warnings



Battery - please read all precautions before use

- Your product is powered by a rechargeable LiPo battery.
- LiPo Batteries used in this product may present risk of fire or chemical burn if mistreated.
- LiPo Batteries may explode if damaged.
- Hot or cold environment may reduce the capacity and lifetime of the battery.
- A fully charged battery will lose its charge over time when left unused.
- For the best performance, the battery needs to be charged at least every 3 months.
- Do not dispose as household waste or in a fire as they may explode.
- If, for any reason, the battery is damaged and the electrolyte (liquid leakage from the device) is leaking, exposure to the substance must be kept to a minimum and:
  - If swallowed, rinse your mouth and seek medical advice as soon as possible.
  - In case of contact with skin, wash with plenty of water. If skin irritation or rash occurs, consult a doctor.
  - In case of contact with eyes, carefully rinse eyes with water for several minutes. Contact a doctor.
- Do not leave devices with LiPo battery unattended during charging.
- Avoid direct contact with a leaky/damaged battery. This is particularly true if liquid leaking from the device occurs. Avoid contact with liquid, ensure airflow in the room, and report the fault to tedee's customer service department for further safe handling.
- Do not insert any conductive objects in device openings and gap – it may cause short-circuits.
- Dispose of batteries according to your local regulations. Please recycle when possible.
- Information about the battery level is available in the tedee app. Do not leave a fully charged battery connected to a charger - overcharging may shorten its lifetime.

- Neither Tedee Sp. z o.o. nor our retailers assume any liability for failures to comply with these warnings and safety guidelines. By purchasing this device, the buyer assumes all risks associated with LiPo batteries. If you do not agree with these conditions, return the device immediately before use.
- Batteries in tedee lock are not interchangeable. Do not remove or replace the battery in your device. Any attempt to do so is risky and may result in product damage and / or injury.
- **Additional instructions for professional facilities dealing with battery and accumulator recycling:** (1) in order to remove the battery, remove the cover with tedee logo from the front side of tedee lock, (2) using a T6 screwdriver remove the two mounting screws, (3) pry and remove the PCB, (4) using a soldering iron, warm up both pads to release the motor wires connected to the PCB, (5) after desoldering, you can disconnect the PCB from the motor, (6) you can now manually remove the battery.

Charging and maintenance

- Charge your device only with the provided approved accessories designated for this product.
- Use only sources that comply with the manufacturer's specifications and have the safety approvals required in your country.
- Disconnect the product from the power supply before cleaning. It shall be wiped with a dry cloth only.
- While unplugging the power cord or any accessory, grasp and pull out the plug, not the cord itself. Never use a damaged cable.
- Do not attempt to disassemble the cable as this may expose you to electric shock.
- Tightness grade
  The tedee lock features IP20 protection class.

tedee

set of items – what's in the box?

tedee lock

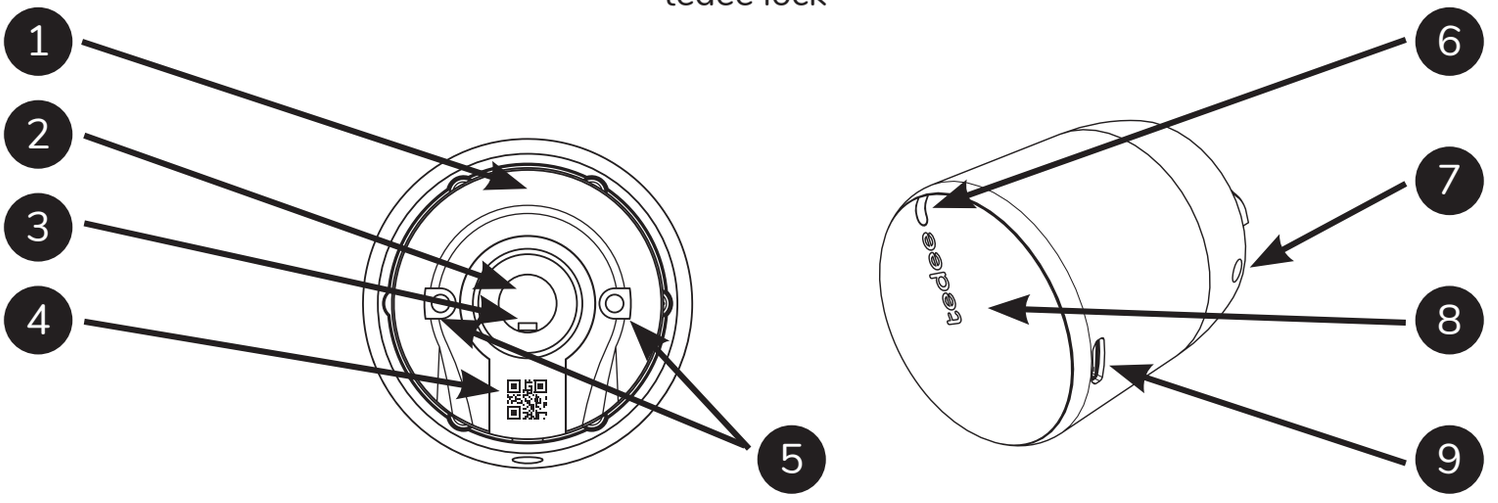

1. Activation code
2. Cylinder shaft mounting hole
3. Mounting screw
4. Activation code (QR)
5. Adapter mounting holes (optional)
6. LED
7. Allen key hole
8. The button
9. Micro USB charging port

Micro USB cable
with magnetic adapter

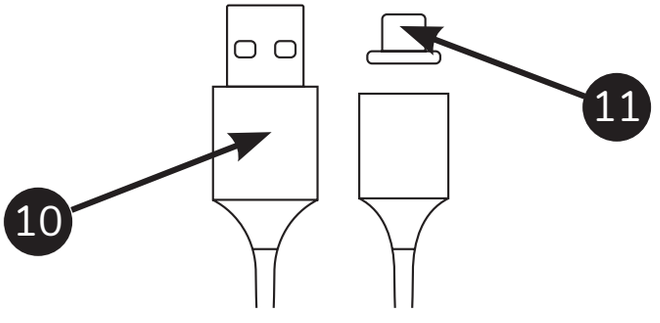

Allen key

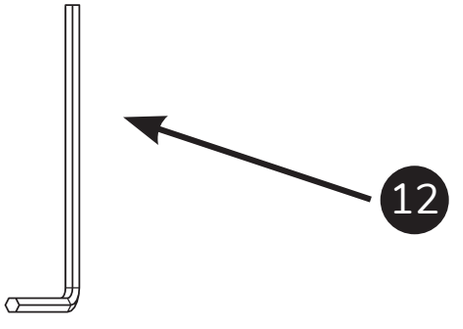

10. USB connector
11. Magnetic micro USB adapter

12. Allen key (size 2)

activation code

Location of the unique activation code (AC) of your tedee lock

Activation code (AC) of your tedee lock is printed on:

- last page of this installation guide (1)
- rear side of your device (2)

While adding your device to tedee app you can either:

- scan the QR Code
- type in AC manually (14 characters)

Helpful tip

Before fitting tedee lock to the cylinder, take a photo of your activation code and keep it.

LAST PAGE
OF THIS GUIDE

1



ACTIVATION
CODE

REAR SIDE
OF TEDEE LOCK

2



setup - 3 easy steps

step 1: install tedee lock

1 Align tedee lock with the shaft of the cylinder and push it forward. IMPORTANT: the mounting screw that extands from the lock mounting hole must fit into the groove on the cylinder shaft.

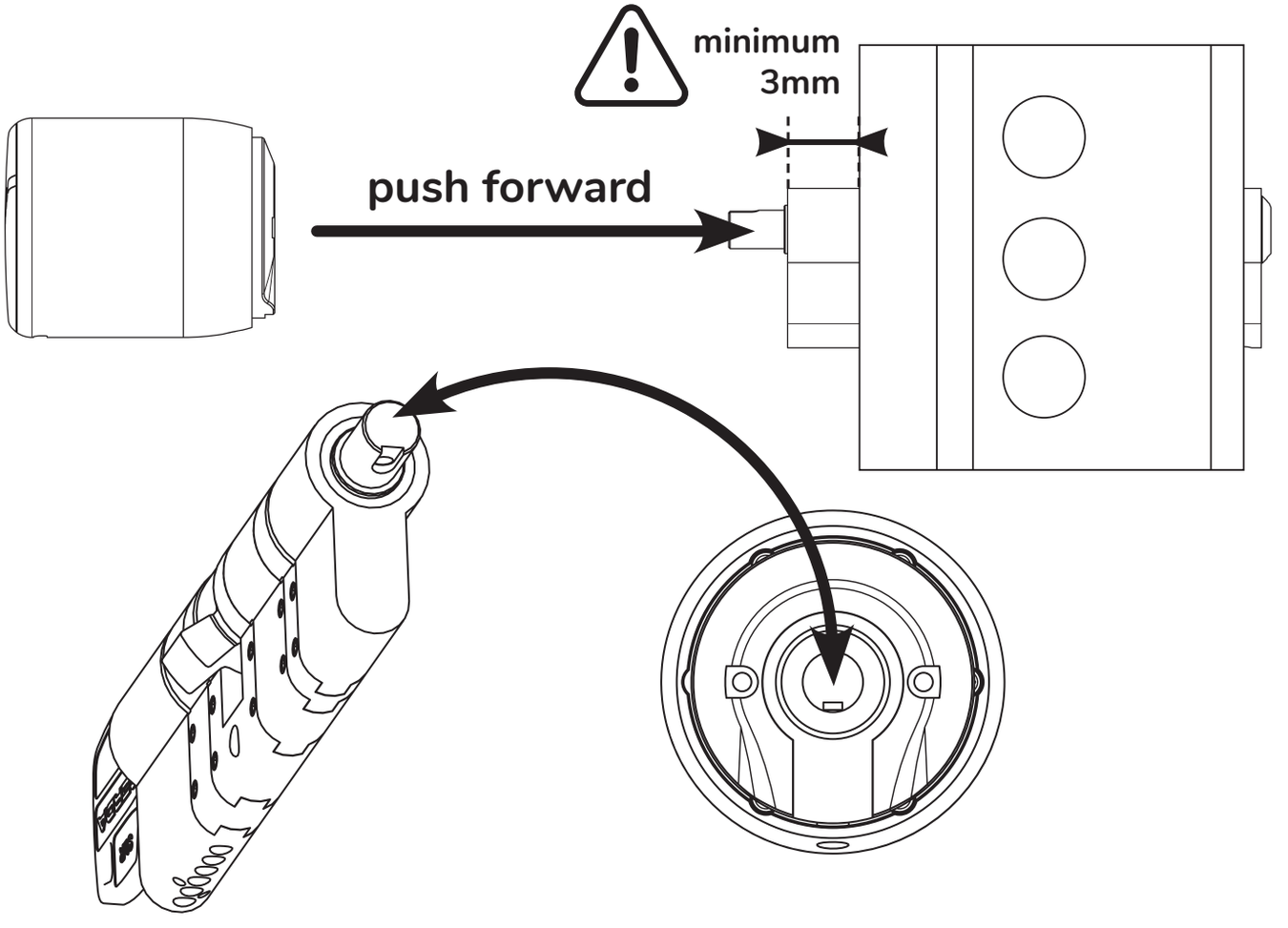

Note: Do not start tedee lock installation before the lock cylinder is installed in the door lock. Make sure that the cylinder sticks out at least 3mm from the lock escutcheon (from the inside of your apartment).

TEDEE LOCK (SIDE VIEW)

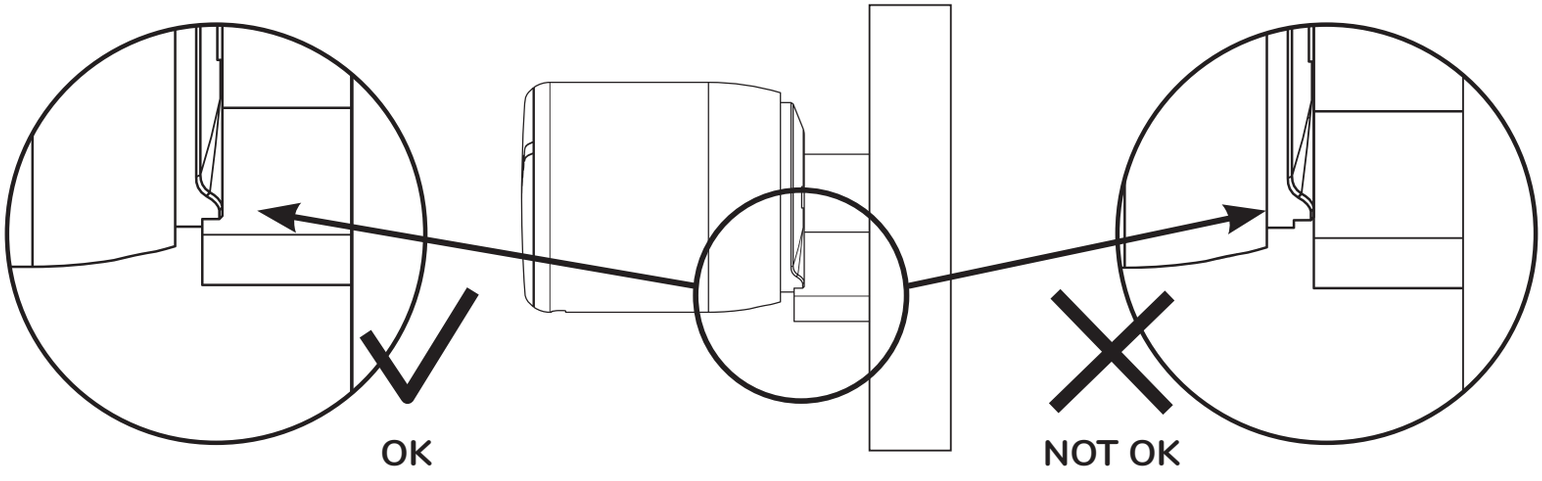

Note: double check if tedee lock rear wheel is fully adjusted and clutches the cylinder. The lock is fitted correctly if the wheel remains in a fixed position when you rotate the lock manually.

2 Fix tedee lock tightly on the cylinder using the Allen key.

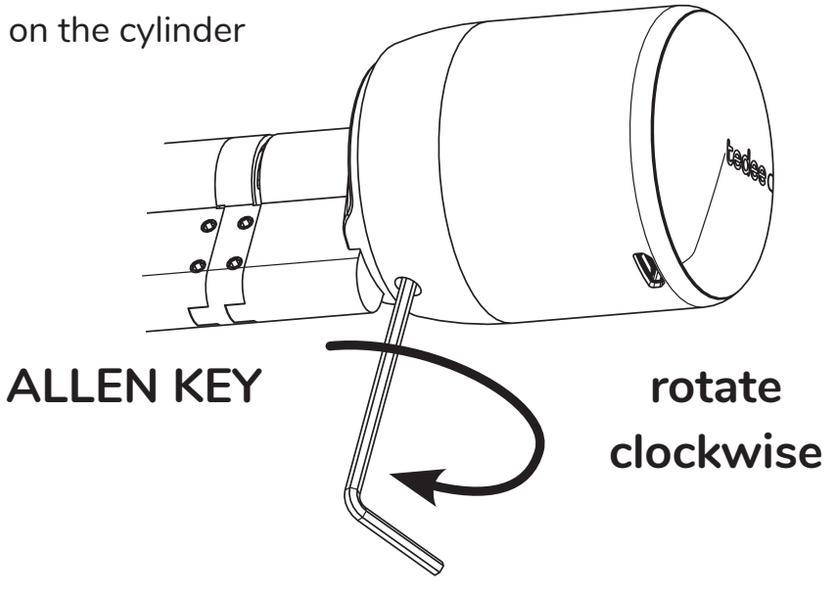

Note: to fix your tedee lock on the cylinder, keep rotating the key until it stops (at least two full turns).

3 Turn on the lock.

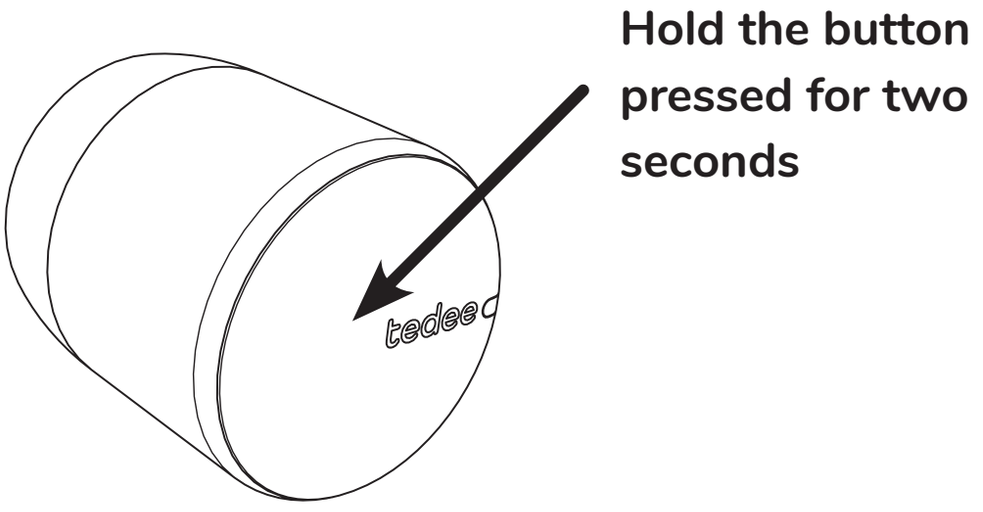

4 Check light signal (LED).

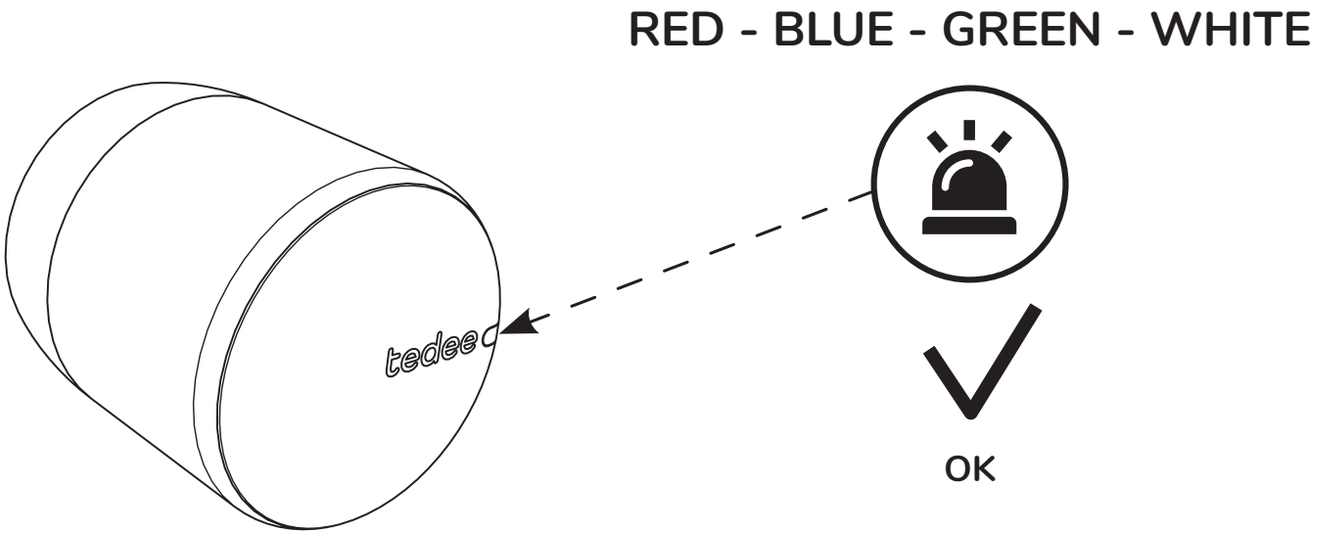

Note: after the RED-BLUE-GREEN-WHITE sequential light signal your tedee lock is ready to be added and calibrated in the app.

step 2: download tedee app, create new account, and log in

(skip this step if you already have an account)

1 Download tedee application.

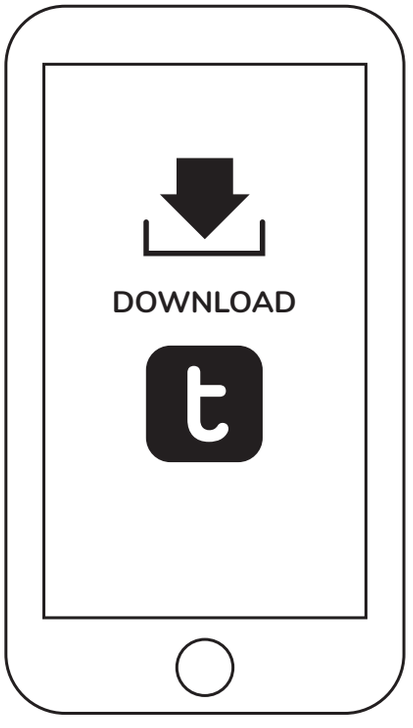

	Android	iOS
Version	6.0 or higher	11.2 or higher
Connection	Internet and Bluetooth® 4.0 or higher	Internet and Bluetooth® 4.0 or higher

2 Create an account and log in.

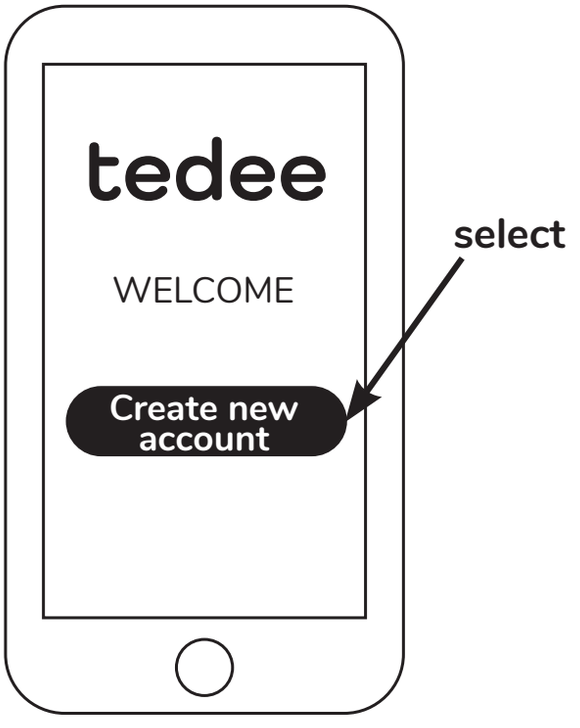

The registration page will open

GET IT ON Google Play

Download on the App Store

step 3: use tedee app to activate and calibrate your tedee lock

1 Enable Internet connection, Bluetooth®, and location on your smartphone.

INTERNET CONNECTION

Bluetooth® CONNECTION

LOCATION

2 Log into tedee application and select ‘Add new device’ option from the menu.

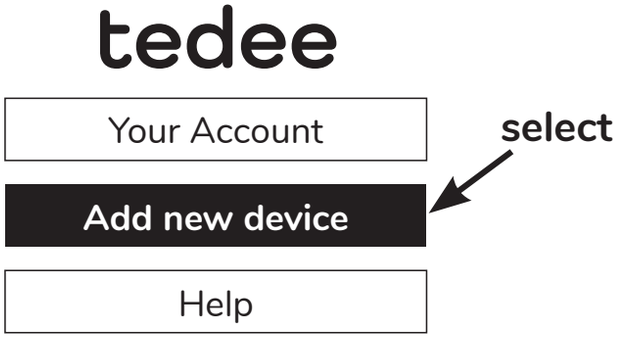

3 Select ‘Add device’ in the lock section.

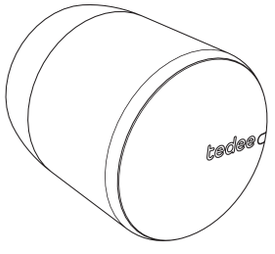

Lock

Add device

select

4 Provide activation code (AC) of your tedee lock.

select:

Scan QR code

Type activation code manually

Note: after scanning the QR code or typing in the AC manually follow instructions in the application.

charging tedee lock

1

Plug the micro USB magnetic adapter into tedee lock charging port and connect the cable.

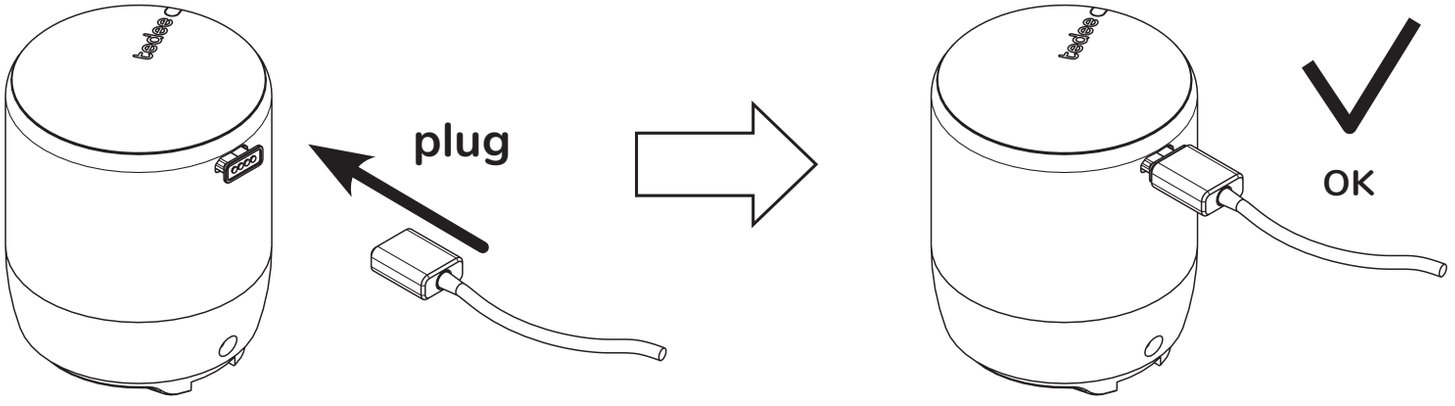

2

Plug the USB cable to a power supply.

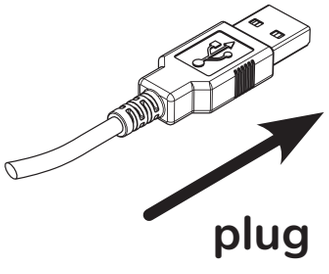

- Power bank
- PC / laptop

deinstallation of tedee lock

1

Rotate the key counter-clockwise.



2

Pull the lock off.

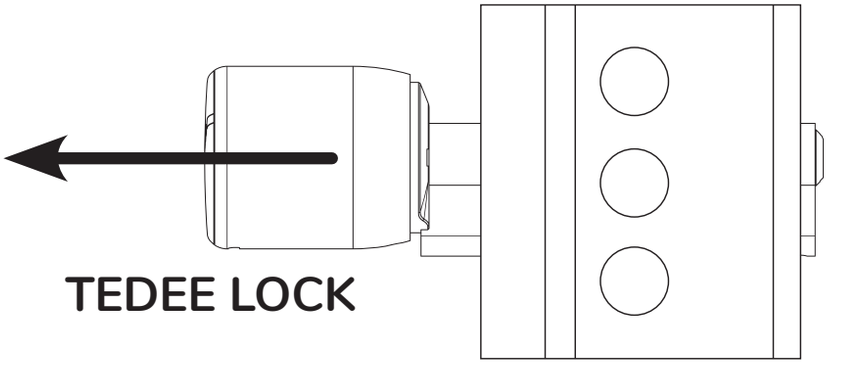

3

OK

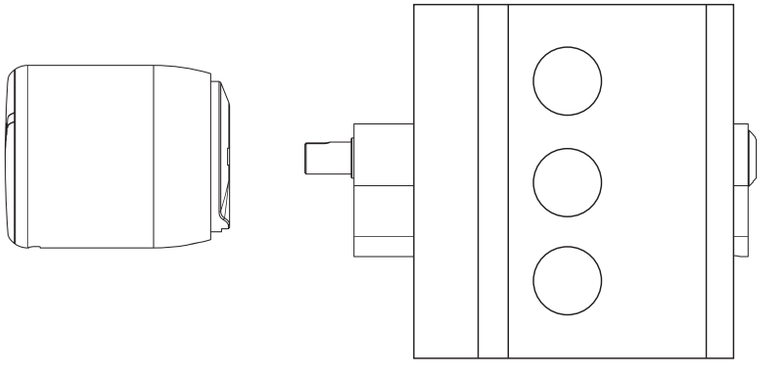

Note: in order to deinstall tedee lock: first use an Allen key to loosen the screw (three full turns counter-clockwise), and then pull it off to detach from the cylinder.

factory reset

- remove tedee lock from the cylinder and set it in the vertical position (button up)
- press and hold the button until the LED lights up
- release the button
- after releasing the button, tedee lock will confirm the factory reset with three quick red flashes
- tedee lock will restart (it may take up to one minute)

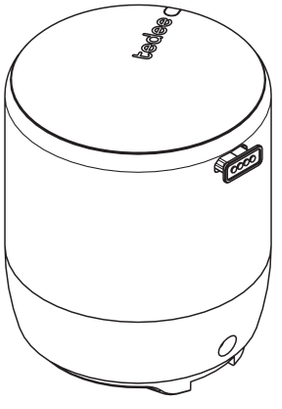

TEDEE LOCK
(VERTICAL POSITION)

Note: Remember to set tedee lock in a vertical position (button up).

additional and technical information

technical specifications

tedee lock

Models	TLV1.0, TLV1.1	Power supply	3000 mAh LiPo battery	
Weight	ca. 196g	Bluetooth® communication	BLE 5.0 2,4GHz	Applies to: TLV1.0 and TLV1.1
Dimensions	Φ 45mm x 55mm			
Operating temperature	10-40°C (indoor only)	Security	TLS 1.3	
Operating humidity	maximum 65%	Can be paired with	tedee bridge	
Origin	Poland, EU	Can be installed on	Euro-profile cylinders	Recommended: GERDA SLR modular cylinder
Production batch number	Additional information: The production batch number of your device is the first eight characters of the "Device Serial Number (S/N)" visible on the label on the package and the label on the device itself. For example, the production batch number of the device with the "Device Serial Number (S/N)" 10101010-000001 is 10101010.			
Marking of color variants	The color variant of the product is marked with a letter at the end of the model name, on the label and on the product rating plate. For example, a device with model TLV1.0 in color variant A is marked as "TLV1.0A".			

radio frequency

Tedee lock TLV1.0 is equipped with Bluetooth® BLE 5.0 2,4GHz radio interface. Bluetooth® interface is used in communication between tedee lock, tedee bridge, and smartphones.

radio frequency

Interface:	Frequency range:	Applies to models:
Bluetooth® BLE 5.0 2,4GHz	from 2.4GHz to 2.483GHz	TLV1.0, TLV1.1

micro USB Cable

Product	Micro USB Cable
Weight	ca. 30g
Length	1.5m or 2.0m

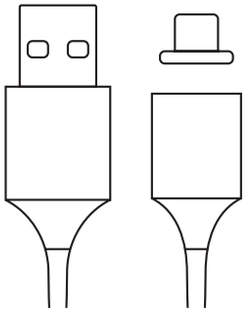

power supply, battery and charging

The lock is equipped with a non-replaceable LiPo 3000mAh battery. It can be recharged using a micro USB cable connected to a power source such as a powerbank or laptop. Battery life and charging time may vary depending on use, type of power supply and environmental conditions. A preview of the battery charge status is shown directly in the tedee application. The tedee application notifies you when the battery is fully charged, after which it is recommended to disconnect the device from the power source. To prolong the life of the battery, it is not recommended to use it in temperatures beyond 10-40°C range. It is recommended to charge the battery every three months if the lock is not used regularly.

software

The current software version is visible in the tedee application: device / settings / general / software version.

Tedee lock software can be updated in two ways: automatically or manually. Automatic updates are only available when the lock is connected to tedee bridge which is connected to the Internet via local Wi-Fi network.

If the lock is not connected to tedee bridge, you may update the software manually using tedee application: device settings / general / firmware version.

Please report any problems with the application that may occur during use (such as login errors or application hangs) to tedee technical support by email at support@tedee.com, at www.tedee.com/support or by phone at (+48) 884 088 011 Monday to Friday during business hours from 8:00 to 16:00 (CET).

LED signals

Meaning (action)	LED (color)	Signal (type)	Additional information
Initialization	Green	Flashing (fast)	LED flashes after turning on the device. It confirms initialization process and system check-up completion.
Ready	Red – Blue - Green – White	Flashing (sequential)	LED flashes after successful initialization of the device. It confirms that your tedee lock is ready to use.
Unlocking	Green	Constant	Green LED is turned on while unlocking. (OFF if the battery level is low)
Locking	Red	Constant	Red LED turned on during the locking phase. (OFF if the battery level is low)
Jammed	Red	5 flashes	LED flashes red when tedee lock is jammed and needs attention. Please check if your device is calibrated correctly – if the problem persists, contact tedee support team.
Device shutdown	Red	Pulsating light	LED flashes after 5 seconds of pressing the button and keeps pulsating until the device is shut down. It confirms the shutdown process.
Factory reset	Red	Pulsating light	The LED blinks with three quick red flashes when the button is released. This confirms that the factory settings have been restored.

Low battery	Red	3 flashes x 3 times	LED flashes when battery drops below 15%. The flashing appears after every locking / unlocking operation. Your tedee lock requires charging.
Battery charging	Blue	Constant	LED shines blue and then fades out after 10 seconds.
Delayed locking	Blue	Flashing	LED flashes fast after pressing and holding the button for at least 1 second (and no longer than 5 seconds). Available only if delayed locking option is ON in tedee app.
Calibration	Blue	Flashing	LED flashes blue during the calibration phase.
Error	Red	Flashing (fast /slow)	Please contact tedee support team.

tedee

legal / environmental notes

EU Declaration of Conformity
Tedee Sp. z o.o. hereby declares that the Tedee Lock TLV1.0 radio device is in accordance with Directive 2014/53/EU. The full text of the EU Declaration of Conformity is available at the following internet address:www.tedee.com/compliance

WEEE / RoHS
To prevent potential negative impact on the environment, consult your local laws and regulations for the proper disposal of electronic devices and batteries in your country. **Disposal of batteries** – if your tedee device contains batteries, do not dispose them with regular household waste. Hand them over to the appropriate recycling or collection point. Batteries used in tedee devices do not contain mercury, cadmium, or lead above the levels specified in 2006/66/EC Directive. **Disposal of electronics** - do not dispose your tedee device with regular household waste. Hand it over to the appropriate recycling or collection point.

Bluetooth®
The Bluetooth® word mark and logos are owned by the Bluetooth SIG, Inc. and any use of such marks by Tedee Sp. z o.o. is under licence. Other trademarks and trade names are those of their respective owners.

Google, Android and Google Play are trademarks of Google LLC.

Apple and App Store are trademarks of Apple Inc. IOS is a trademark or registered trademark of Cisco in the U.S. and other countries and is used under license.

warranty

Tedee limited hardware warranty - Tedee Sp. z o.o. warrants that tedee devices are free from hardware defects in materials and workmanship for the period of not less than 2 years from the date of the first retail purchase. Tedee Sp. z o.o. does not take responsibility for the misuse of devices (including methods of charging other than described in this booklet), especially if any changes or modifications to the device hardware or software which are not approved, recommended, or provided by tedee, have been undertaken by the user. Full warranty information is available at the following link: www.tedee.com/warranty

technical support

For technical support please contact our support team



support@tedee.com



www.tedee.com/support



(+48) 884 088 011
Mon-Fri 8am – 4pm (CET)

tedee

Tedee Sp. z o.o. | Bohdanowicza 21/57, 02-127 Warsaw, POLAND
www.tedee.com | support@tedee.com

your activation code (AC)

Note: the activation code is case-sensitive. When typing it in, please pay attention to capital / small letters.