Archetto IV68 Hinged Door (Open IN)

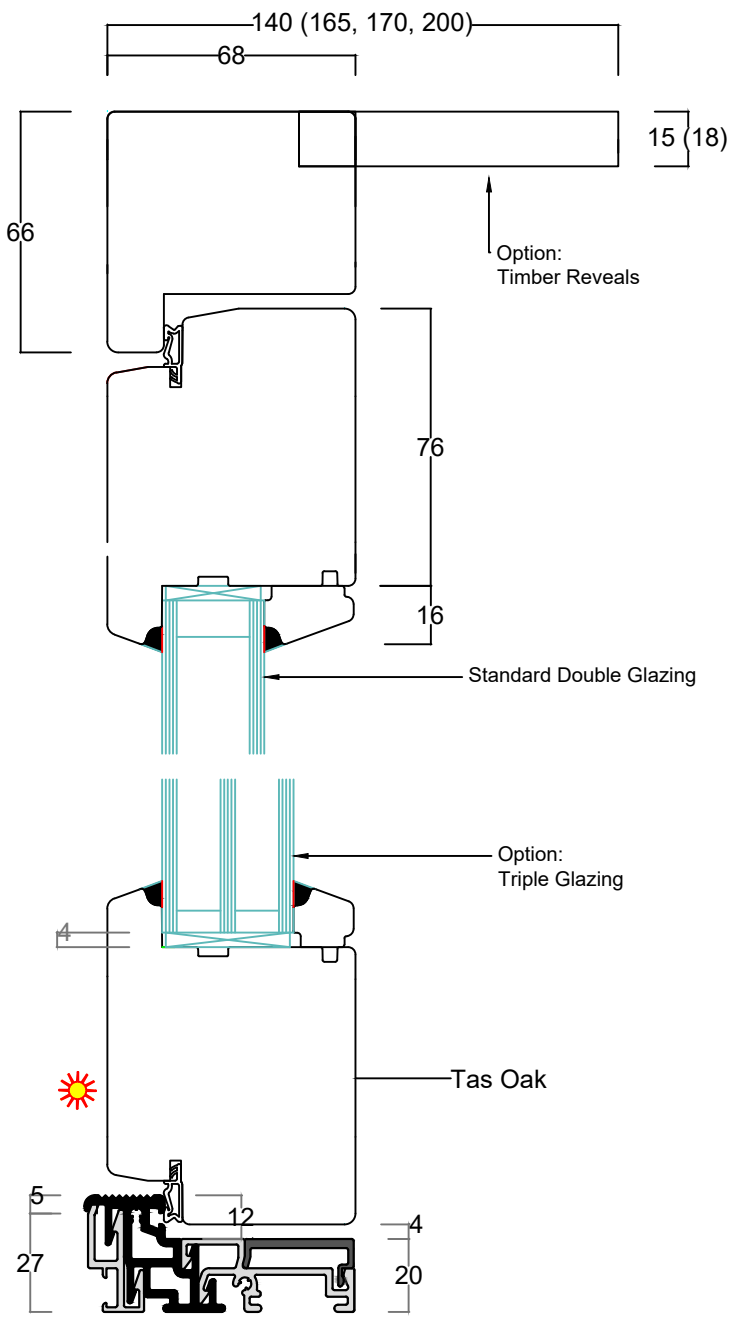

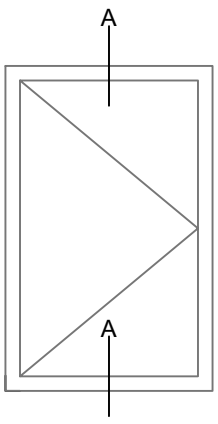

IMPORTANT: Inward opening hinged doors must be installed under adequate weather protection. These doors are NOT designed for direct exposure to rain, as water ingress will occur even under non-wind driven rainfall conditions.

All dimensions, opening configurations, installation details and specifications are to be confirmed by the client/builder. The purpose of the included drawings are for illustration assistance ONLY in order to help determining custom designs and installation methods. ALL details are to be confirmed and signed off by clients/builders.
BINQ Pty Ltd is responsible for including the correct information and depiction of the door and window systems being sold. Any items that are not part of BINQ's standard offer may be present within this drawing but are NOT included in any order pricing or processing

BQ-1.1

Archetto IV68 Hinged Door (Open IN)

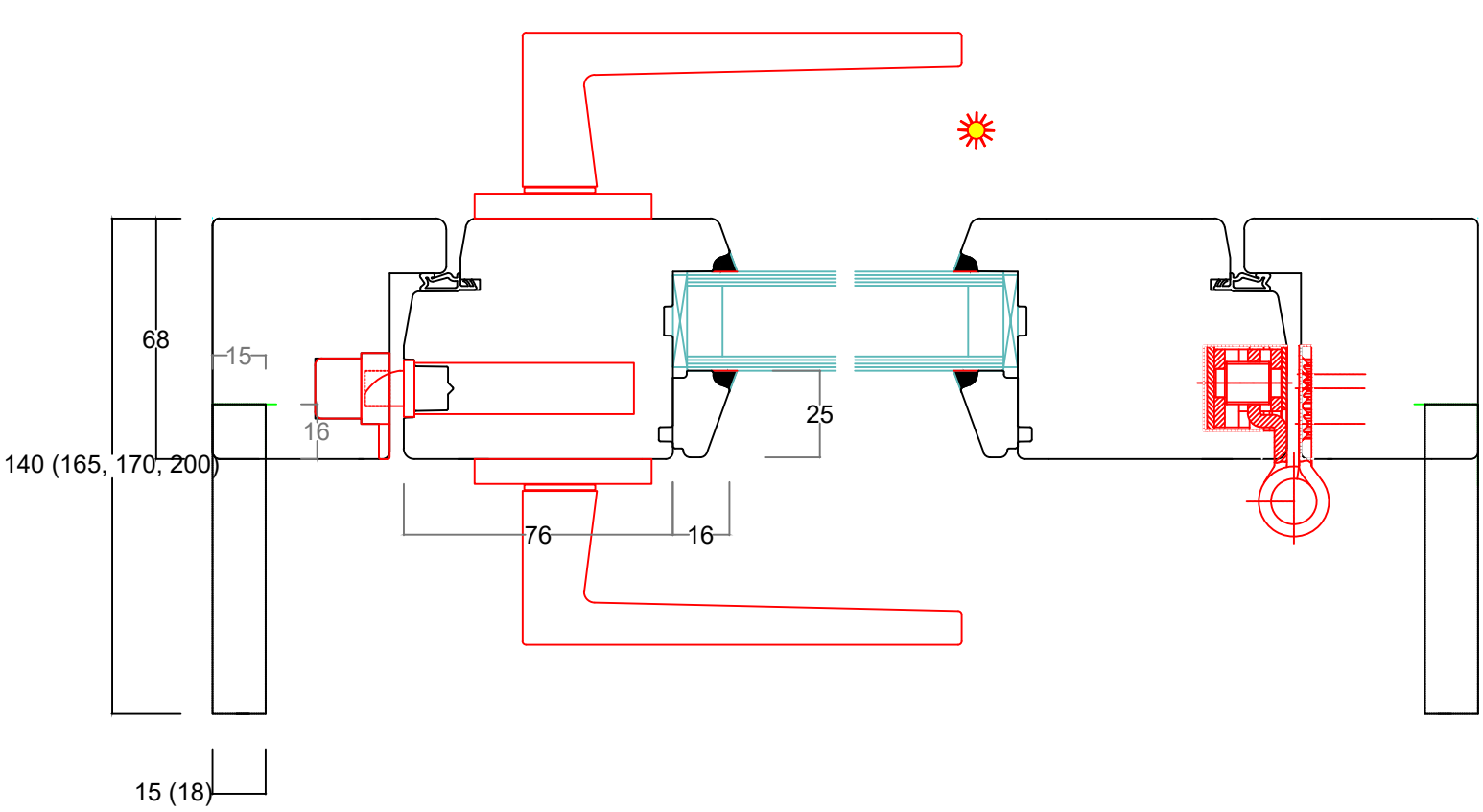

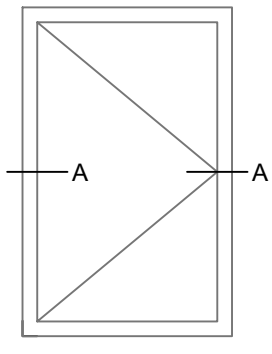

IMPORTANT: Inward opening hinged doors must be installed under adequate weather protection. These doors are NOT designed for direct exposure to rain, as water ingress will occur even under non-wind driven rainfall conditions.

All dimensions, opening configurations, installation details and specifications are to be confirmed by the client/builder. The purpose of the included drawings are for illustration assistance ONLY in order to help determining custom designs and installation methods. ALL details are to be confirmed and signed off by clients/builders.
BINQ Pty Ltd is responsible for including the correct information and depiction of the door and window systems being sold. Any items that are not part of BINQ's standard offer may be present within this drawing but are NOT included in any order pricing or processing

BQ-1.2

Archetto IV68 Hinged Door (Open IN)

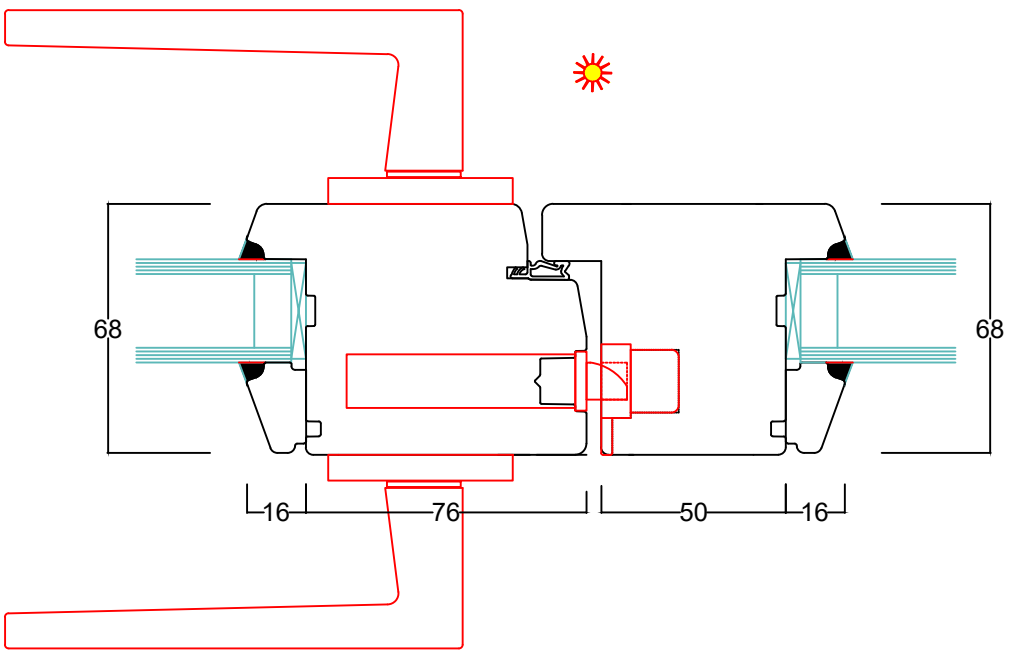

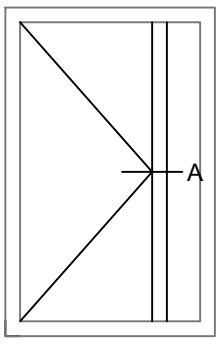

IMPORTANT: Inward opening hinged doors must be installed under adequate weather protection. These doors are NOT designed for direct exposure to rain, as water ingress will occur even under non-wind driven rainfall conditions.

All dimensions, opening configurations, installation details and specifications are to be confirmed by the client/builder. The purpose of the included drawings are for illustration assistance ONLY in order to help determining custom designs and installation methods. ALL details are to be confirmed and signed off by clients/builders.
BINQ Pty Ltd is responsible for including the correct information and depiction of the door and window systems being sold. Any items that are not part of BINQ's standard offer may be present within this drawing but are NOT included in any order pricing or processing

BQ-1.3

Archetto IV68 Hinged Door (Open IN)

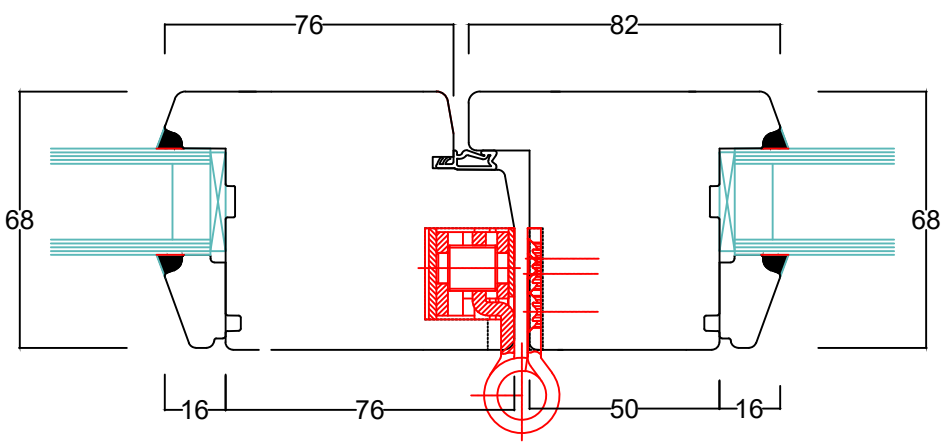

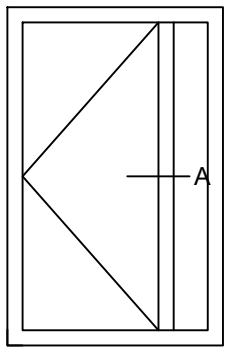

IMPORTANT: Inward opening hinged doors must be installed under adequate weather protection. These doors are NOT designed for direct exposure to rain, as water ingress will occur even under non-wind driven rainfall conditions.

All dimensions, opening configurations, installation details and specifications are to be confirmed by the client/builder. The purpose of the included drawings are for illustration assistance ONLY in order to help determining custom designs and installation methods. ALL details are to be confirmed and signed off by clients/builders.
BINQ Pty Ltd is responsible for including the correct information and depiction of the door and window systems being sold. Any items that are not part of BINQ's standard offer may be present within this drawing but are NOT included in any order pricing or processing

BQ-1.4

Archetto IV68 Hinged Door (Open IN) - French

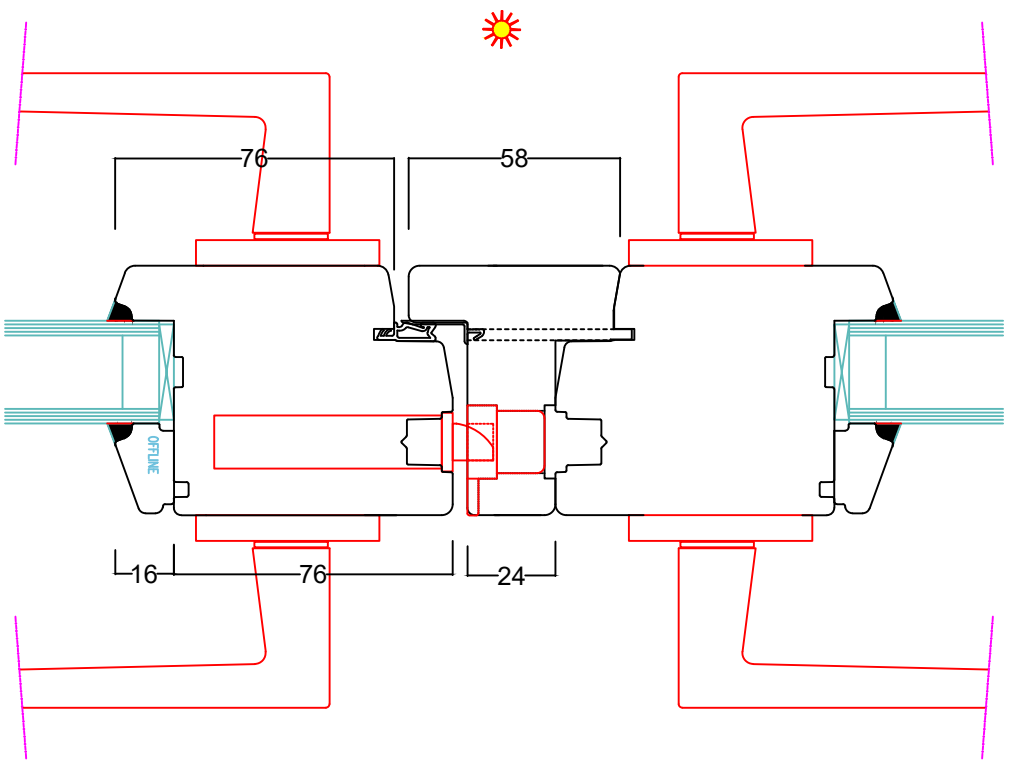

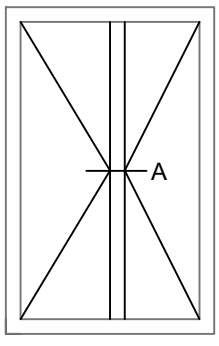

IMPORTANT: Inward opening hinged doors must be installed under adequate weather protection. These doors are NOT designed for direct exposure to rain, as water ingress will occur even under non-wind driven rainfall conditions.

All dimensions, opening configurations, installation details and specifications are to be confirmed by the client/builder. The purpose of the included drawings are for illustration assistance ONLY in order to help determining custom designs and installation methods. ALL details are to be confirmed and signed off by clients/builders.
BINQ Pty Ltd is responsible for including the correct information and depiction of the door and window systems being sold. Any items that are not part of BINQ's standard offer may be present within this drawing but are NOT included in any order pricing or processing

BQ-1.5

Archetto IV68 Hinged Door (Open IN)

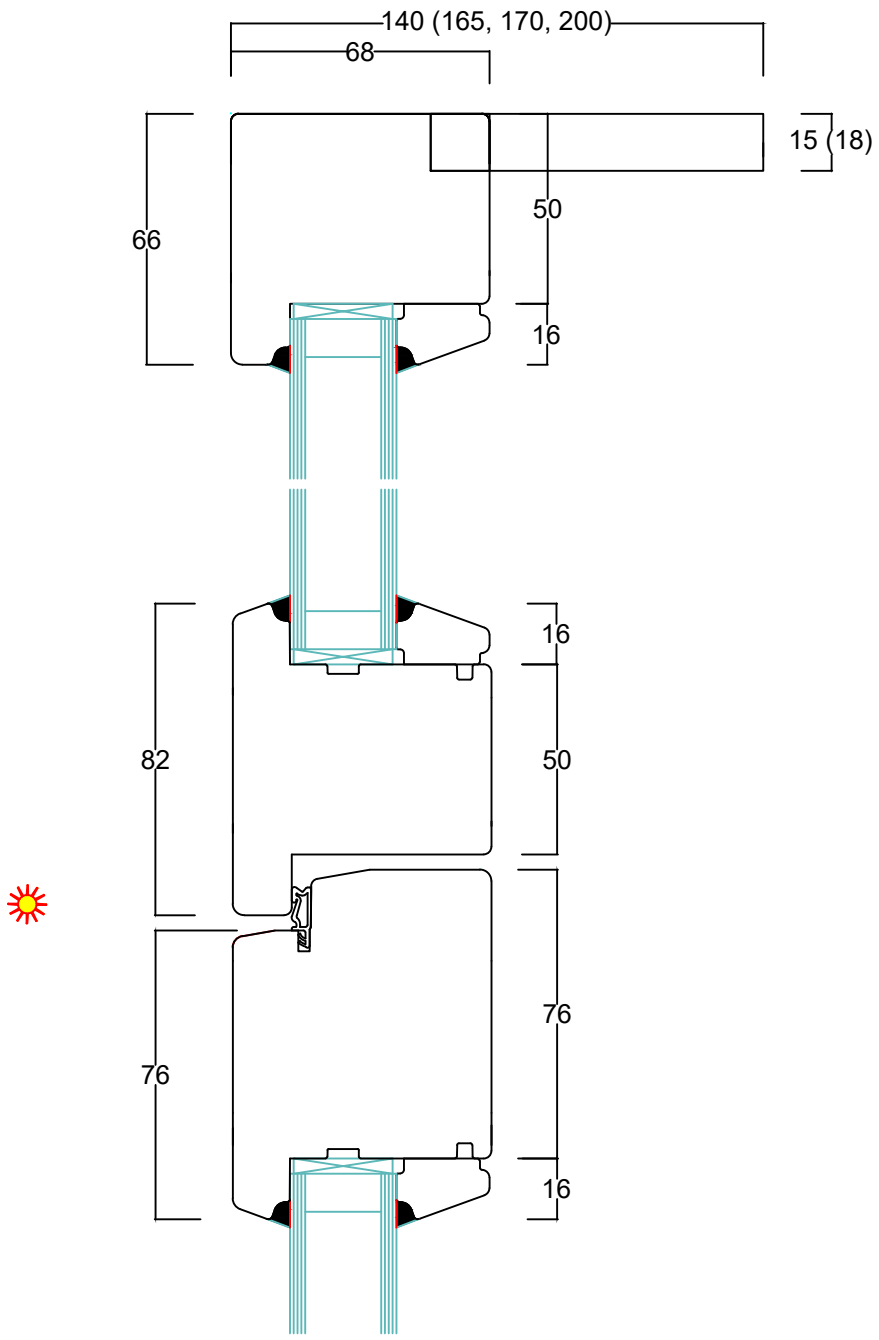

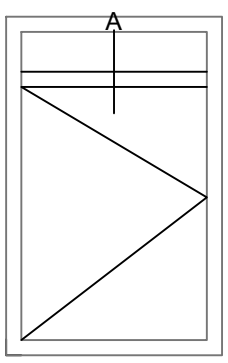

IMPORTANT: Inward opening hinged doors must be installed under adequate weather protection. These doors are NOT designed for direct exposure to rain, as water ingress will occur even under non-wind driven rainfall conditions.

All dimensions, opening configurations, installation details and specifications are to be confirmed by the client/builder. The purpose of the included drawings are for illustration assistance ONLY in order to help determining custom designs and installation methods. ALL details are to be confirmed and signed off by clients/builders.
BINQ Pty Ltd is responsible for including the correct information and depiction of the door and window systems being sold. Any items that are not part of BINQ's standard offer may be present within this drawing but are NOT included in any order pricing or processing

BQ-1.6

Archetto IV68 Hinged Door (Open IN) - Insulated Cladding

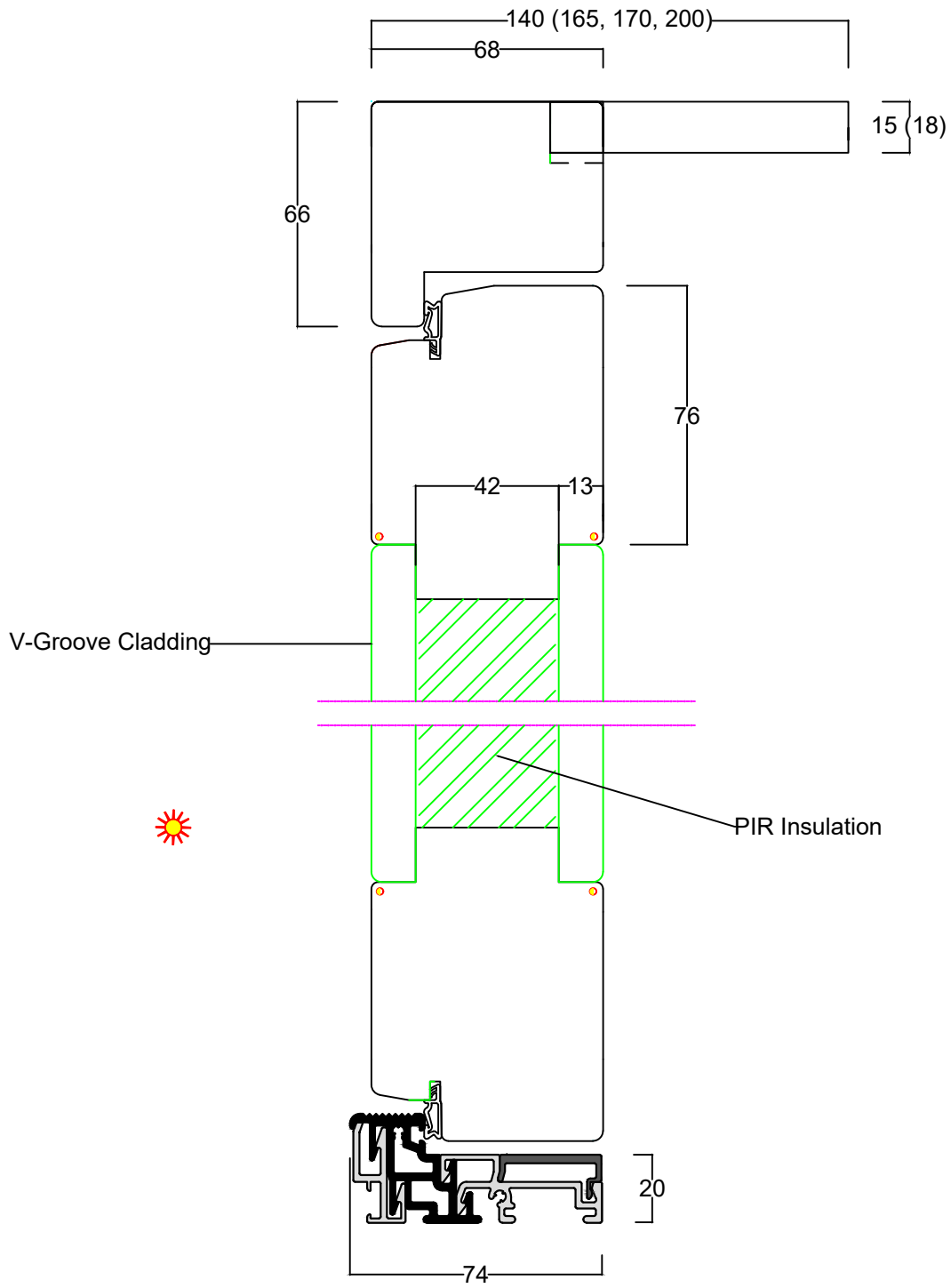

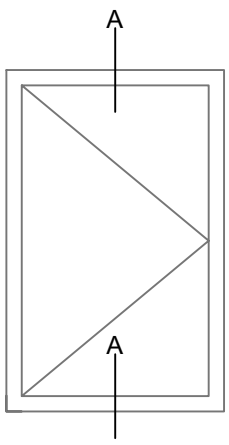

IMPORTANT: Inward opening hinged doors must be installed under adequate weather protection. These doors are NOT designed for direct exposure to rain, as water ingress will occur even under non-wind driven rainfall conditions.

All dimensions, opening configurations, installation details and specifications are to be confirmed by the client/builder. The purpose of the included drawings are for illustration assistance ONLY in order to help determining custom designs and installation methods. ALL details are to be confirmed and signed off by clients/builders.
BINQ Pty Ltd is responsible for including the correct information and depiction of the door and window systems being sold. Any items that are not part of BINQ's standard offer may be present within this drawing but are NOT included in any order pricing or processing

BQ-1.7

Archetto IV68 Hinged Door (Open IN) - Vic Ash Ply Veneer

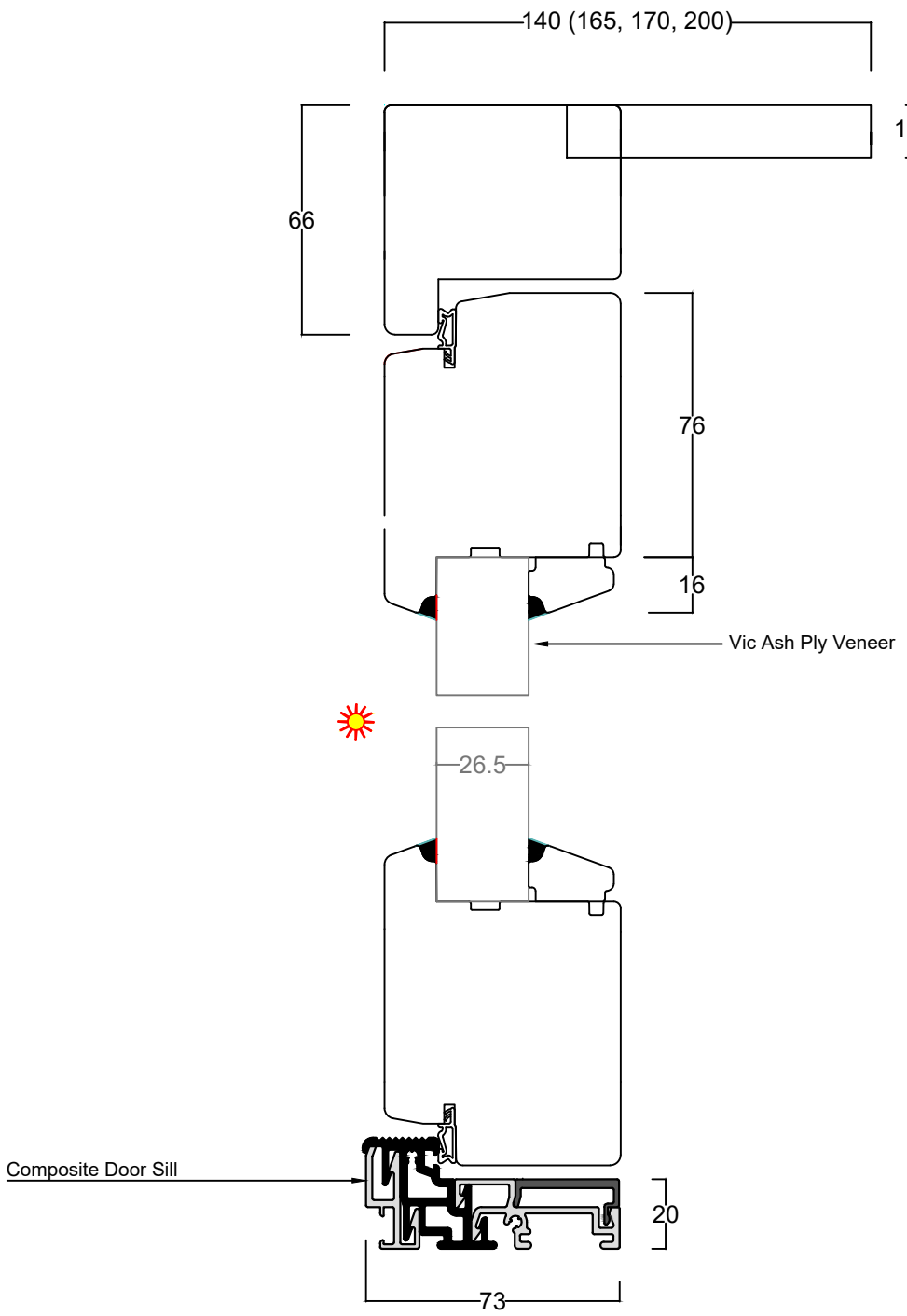

IMPORTANT: Inward opening hinged doors must be installed under adequate weather protection. These doors are NOT designed for direct exposure to rain, as water ingress will occur even under non-wind driven rainfall conditions.

All dimensions, opening configurations, installation details and specifications are to be confirmed by the client/builder. The purpose of the included drawings are for illustration assistance ONLY in order to help determining custom designs and installation methods. ALL details are to be confirmed and signed off by clients/builders.
BINQ Pty Ltd is responsible for including the correct information and depiction of the door and window systems being sold. Any items that are not part of BINQ's standard offer may be present within this drawing but are NOT included in any order pricing or processing

BQ-1.8

Archetto IV68 Hinged Door (Open OUT)

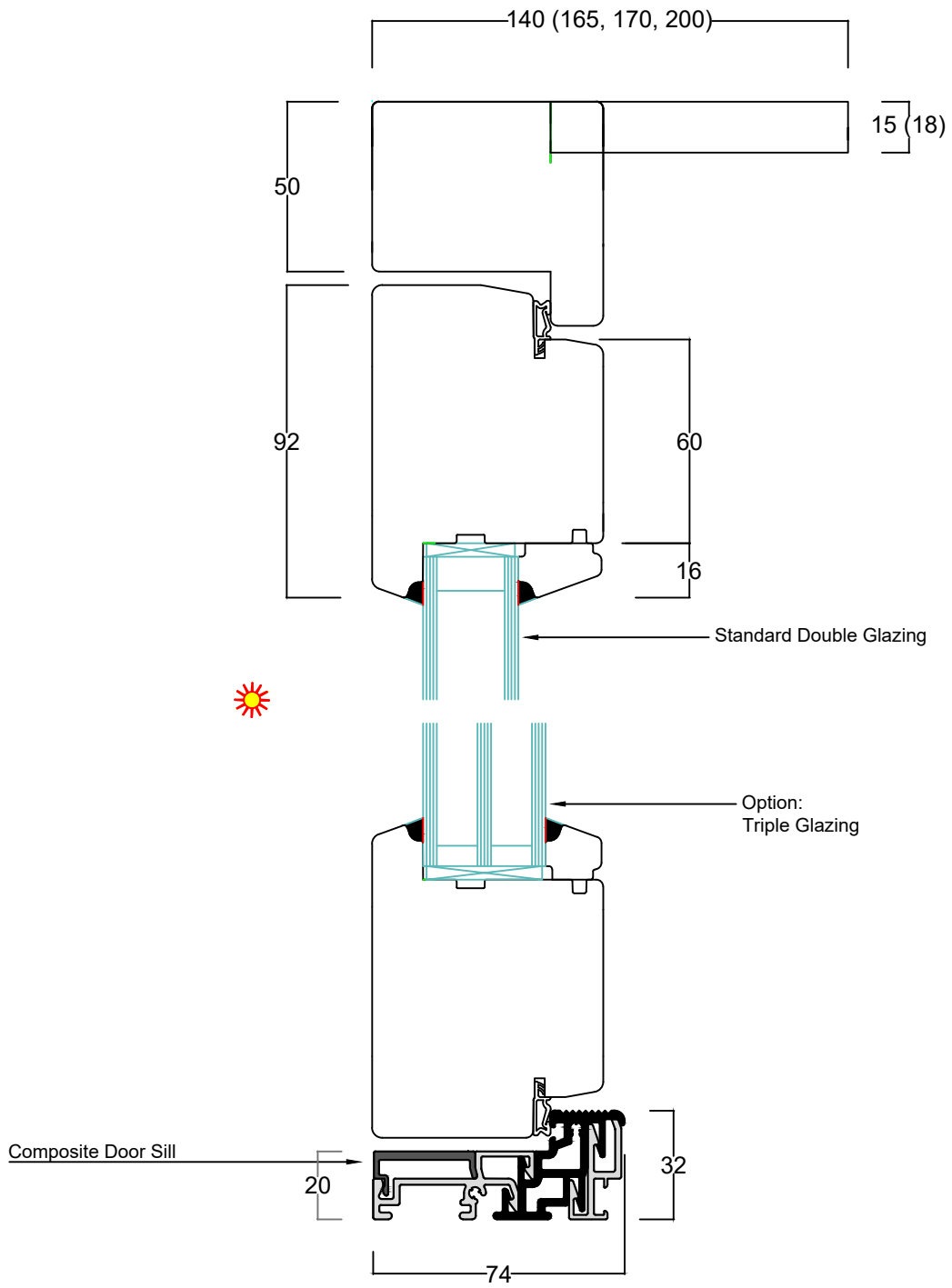

All dimensions, opening configurations, installation details and specifications are to be confirmed by the client/builder. The purpose of the included drawings are for illustration assistance ONLY in order to help determining custom designs and installation methods. ALL details are to be confirmed and signed off by clients/builders.
BINQ Pty Ltd is responsible for including the correct information and depiction of the door and window systems being sold. Any items that are not part of BINQ's standard offer may be present within this drawing but are NOT included in any order pricing or processing

BQ-1.9

Archetto IV68 Hinged Door (Open OUT)

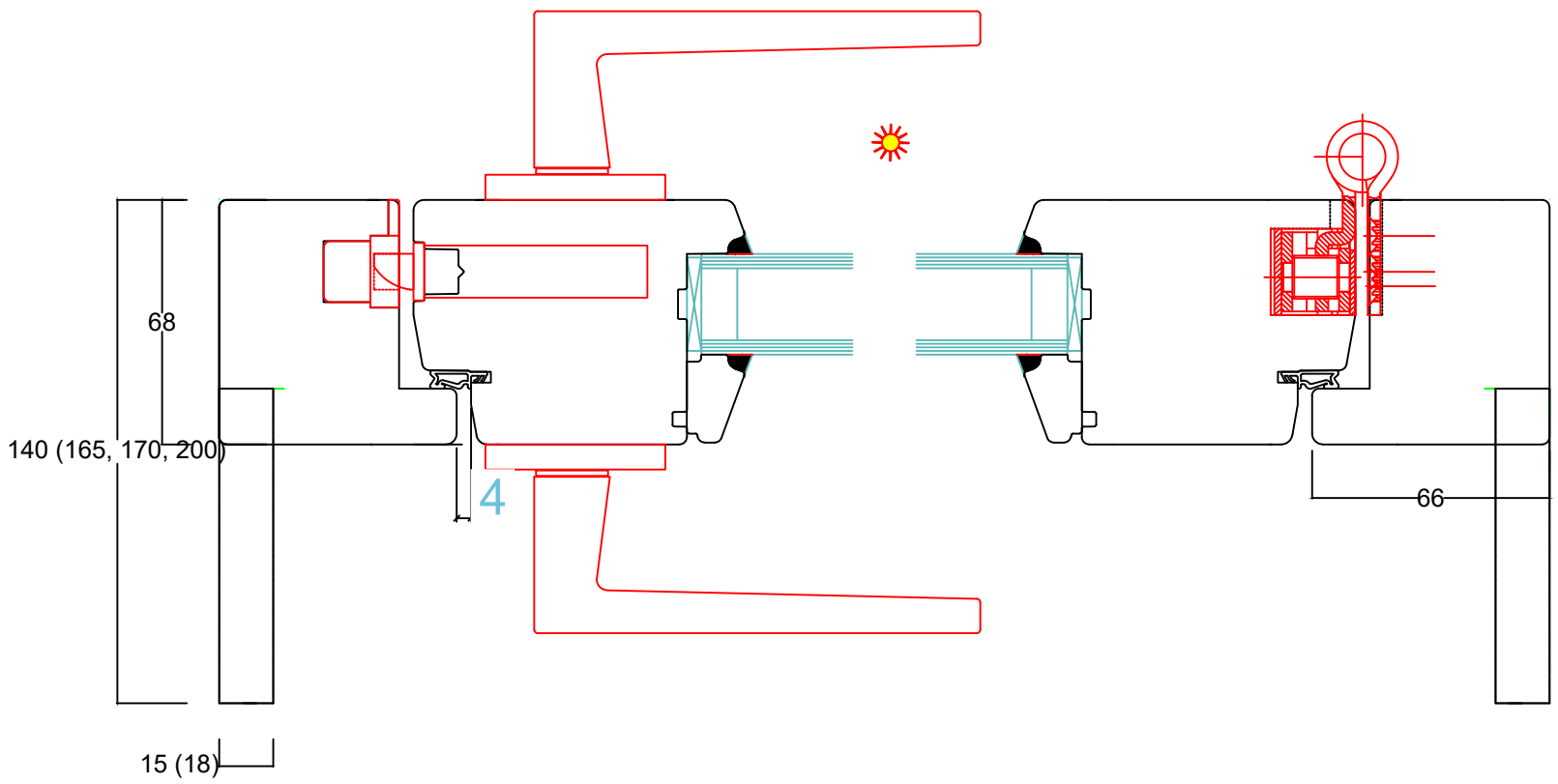

All dimensions, opening configurations, installation details and specifications are to be confirmed by the client/builder. The purpose of the included drawings are for illustration assistance ONLY in order to help determining custom designs and installation methods. ALL details are to be confirmed and signed off by clients/builders.
BINQ Pty Ltd is responsible for including the correct information and depiction of the door and window systems being sold. Any items that are not part of BINQ's standard offer may be present within this drawing but are NOT included in any order pricing or processing

BQ-1.10

Archetto IV68 Hinged Door (Open OUT)

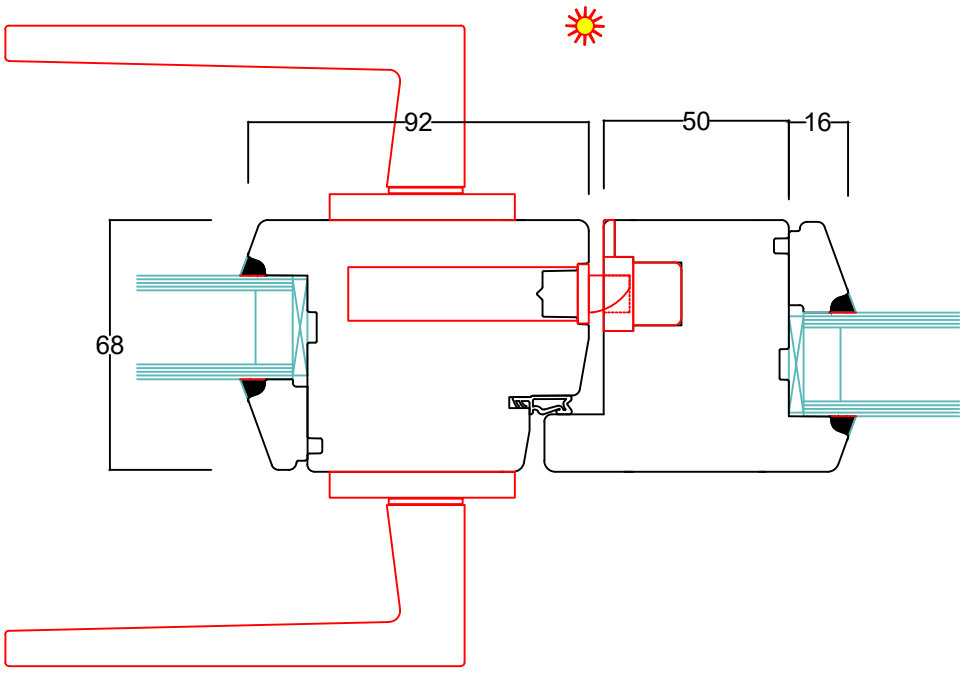

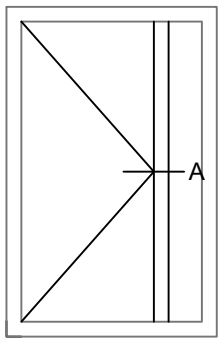

All dimensions, opening configurations, installation details and specifications are to be confirmed by the client/builder. The purpose of the included drawings are for illustration assistance ONLY in order to help determining custom designs and installation methods. ALL details are to be confirmed and signed off by clients/builders.
BINQ Pty Ltd is responsible for including the correct information and depiction of the door and window systems being sold. Any items that are not part of BINQ's standard offer may be present within this drawing but are NOT included in any order pricing or processing

BQ-2.1

Archetto IV68 Hinged Door (Open OUT)

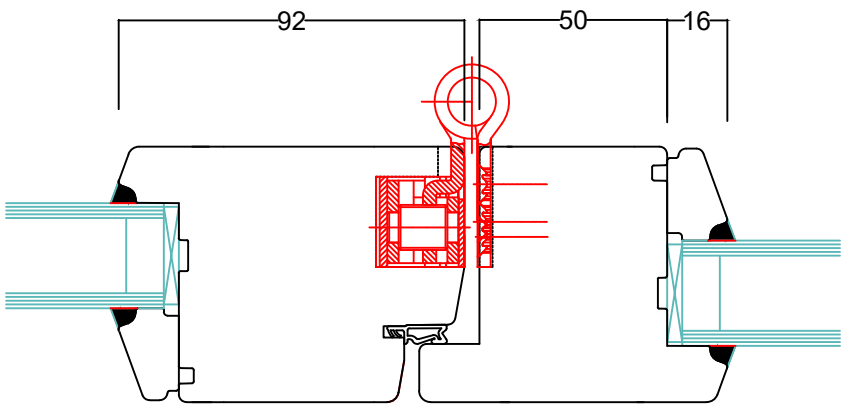

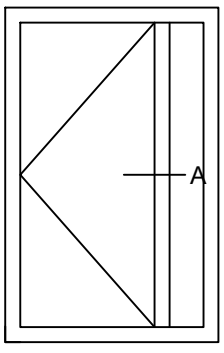

All dimensions, opening configurations, installation details and specifications are to be confirmed by the client/builder. The purpose of the included drawings are for illustration assistance ONLY in order to help determining custom designs and installation methods. ALL details are to be confirmed and signed off by clients/builders.
BINQ Pty Ltd is responsible for including the correct information and depiction of the door and window systems being sold. Any items that are not part of BINQ's standard offer may be present within this drawing but are NOT included in any order pricing or processing

BQ-2.2

Archetto IV68 Hinged Door (Open OUT)

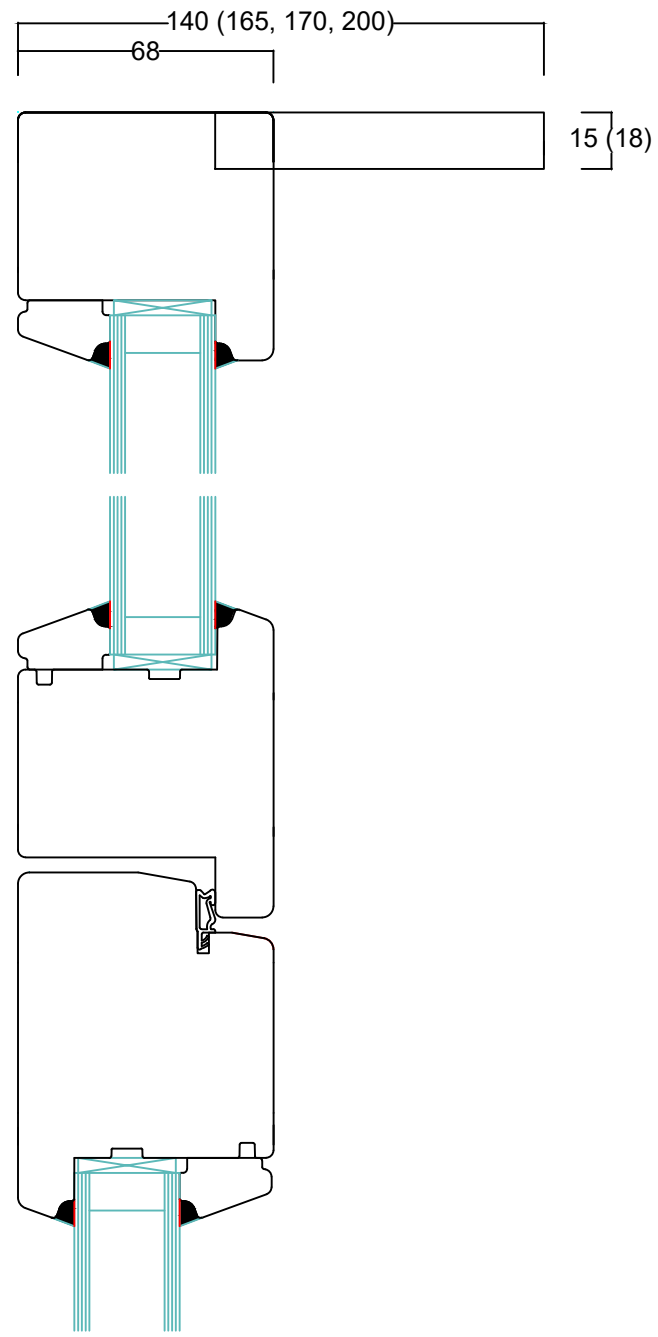

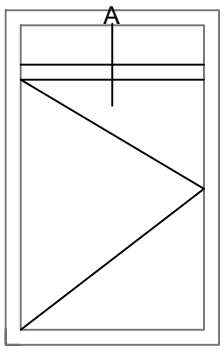

All dimensions, opening configurations, installation details and specifications are to be confirmed by the client/builder. The purpose of the included drawings are for illustration assistance ONLY in order to help determining custom designs and installation methods. ALL details are to be confirmed and signed off by clients/builders.
BINQ Pty Ltd is responsible for including the correct information and depiction of the door and window systems being sold. Any items that are not part of BINQ's standard offer may be present within this drawing but are NOT included in any order pricing or processing

BQ-2.3

Archetto IV68 Hinged Door (Open OUT)

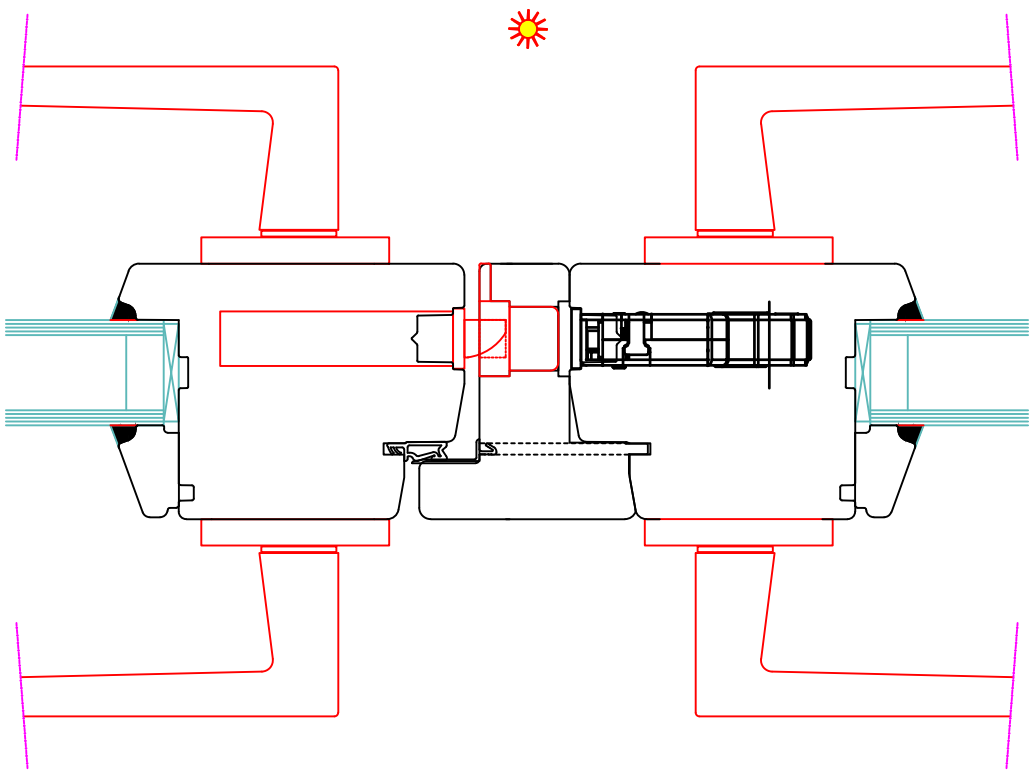

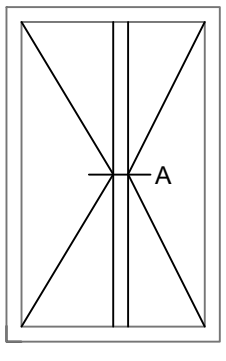

All dimensions, opening configurations, installation details and specifications are to be confirmed by the client/builder. The purpose of the included drawings are for illustration assistance ONLY in order to help determining custom designs and installation methods. ALL details are to be confirmed and signed off by clients/builders.
BINQ Pty Ltd is responsible for including the correct information and depiction of the door and window systems being sold. Any items that are not part of BINQ's standard offer may be present within this drawing but are NOT included in any order pricing or processing

BQ-2.4

Archetto IV68 Hinged Door - Glazing Instructions

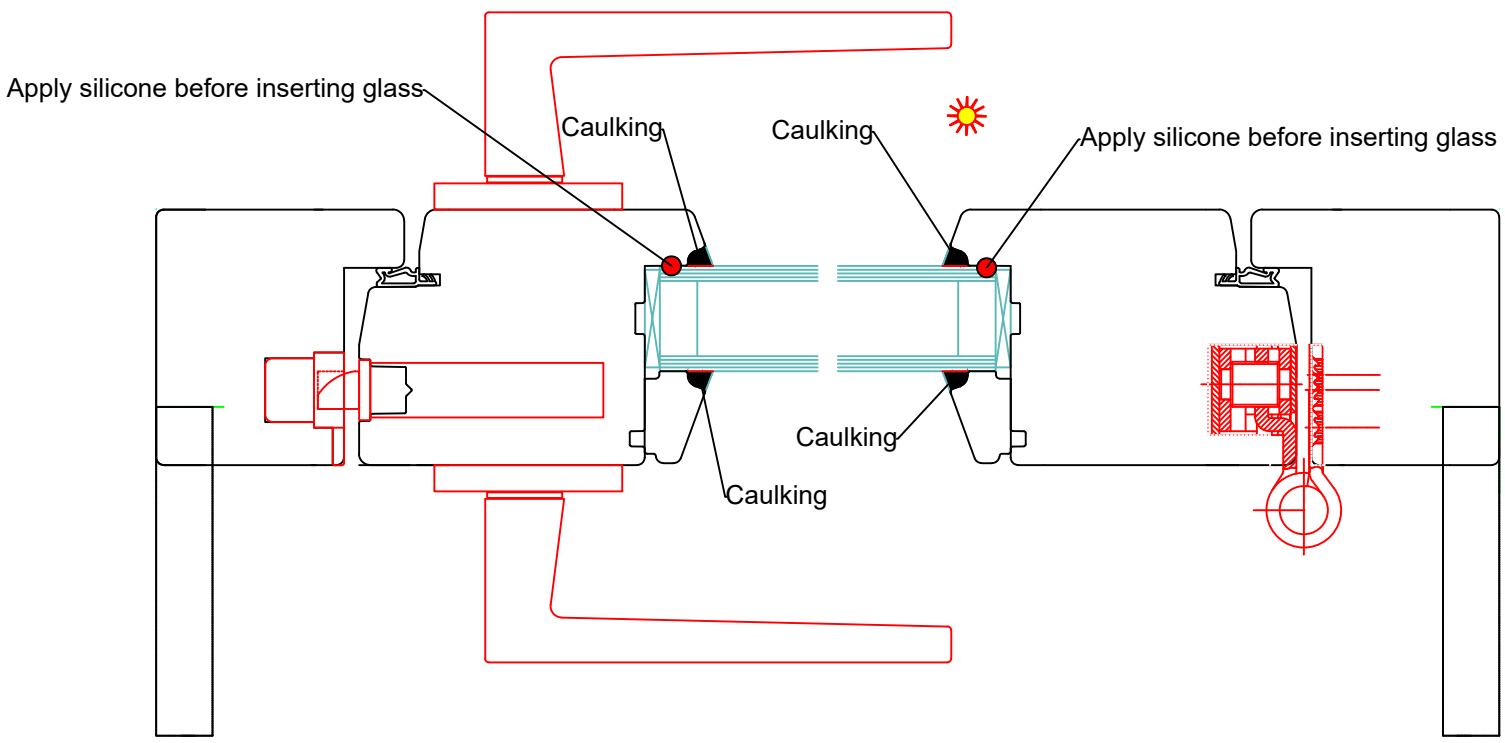

All dimensions, opening configurations, installation details and specifications are to be confirmed by the client/builder. The purpose of the included drawings are for illustration assistance ONLY in order to help determining custom designs and installation methods. ALL details are to be confirmed and signed off by clients/builders.
BINQ Pty Ltd is responsible for including the correct information and depiction of the door and window systems being sold. Any items that are not part of BINQ's standard offer may be present within this drawing but are NOT included in any order pricing or processing

BQ-2.7

Archetto IV68 Hinged Door (Open IN Only) - Tedee Pro

IMPORTANT: Inward opening hinged doors must be installed under adequate weather protection. These doors are NOT designed for direct exposure to rain, as water ingress will occur even under non-wind driven rainfall conditions.

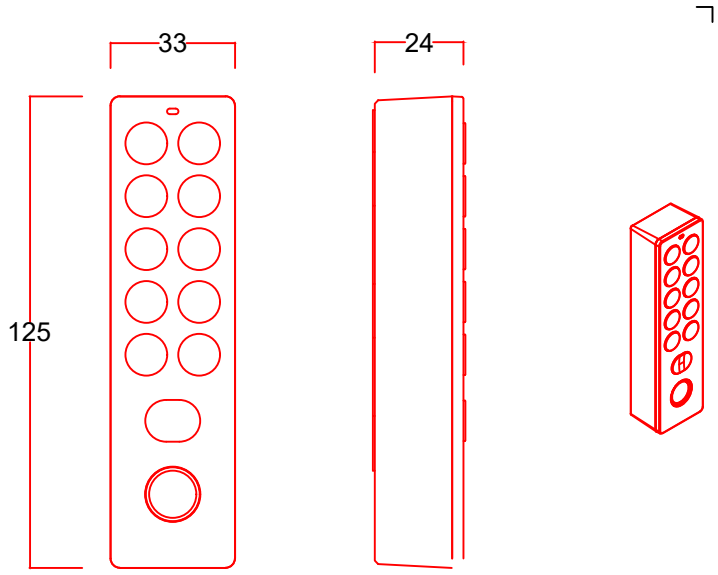

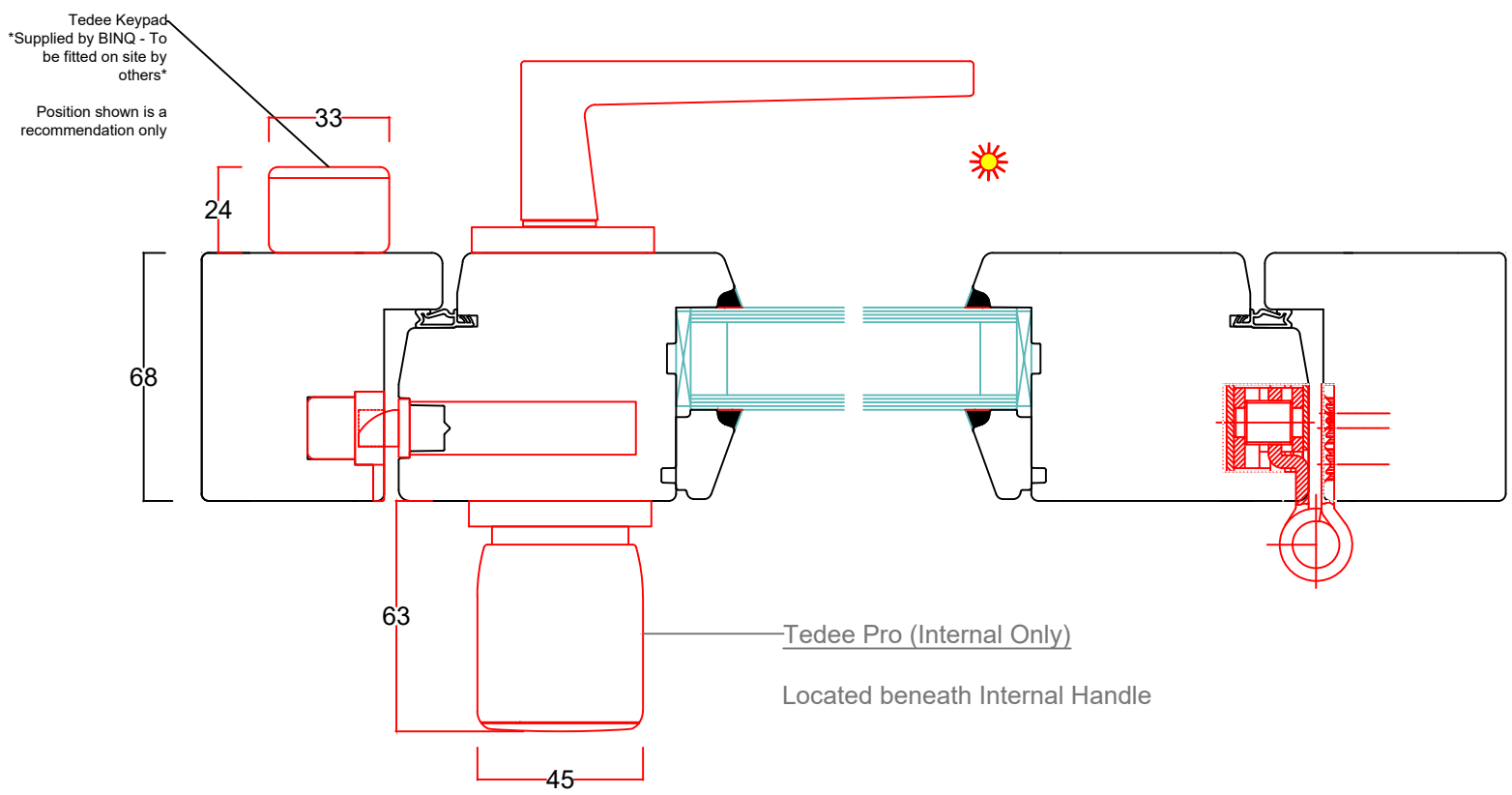

Always ensure you have access to key provided for manual override in case of automation failure

Recommended Accessories:

- Tedee Keypad (Supplied loose, to be fitted on site by others)
  - Ability to use secure pin number or fingerprint scanning
  - Ability to lock the door by entering pin or "Tick" button
- Tedee Door Sensor (Supplied loose, to be fitted on site by others)
  - Adds ability to check door open or closed status in Tedee app
  - Adds auto-lock and auto-unlock function
- Tedee Wifi Bridge (Supplied loose, to be fitted on sit by others)
  - Adds ability for remote control (off premisis use) of Tedee lock without bluetooth

All dimensions, opening configurations, installation details and specifications are to be confirmed by the client/builder. The purpose of the included drawings are for illustration assistance ONLY in order to help determining custom designs and installation methods. ALL details are to be confirmed and signed off by clients/builders.
BINQ Pty Ltd is responsible for including the correct information and depiction of the door and window systems being sold. Any items that are not part of BINQ's standard offer may be present within this drawing but are NOT included in any order pricing or processing

BQ-2.8

Archetto IV68 Hinged Door (Open IN Only) - Tedee Pro

IMPORTANT: Inward opening hinged doors must be installed under adequate weather protection. These doors are NOT designed for direct exposure to rain, as water ingress will occur even under non-wind driven rainfall conditions.

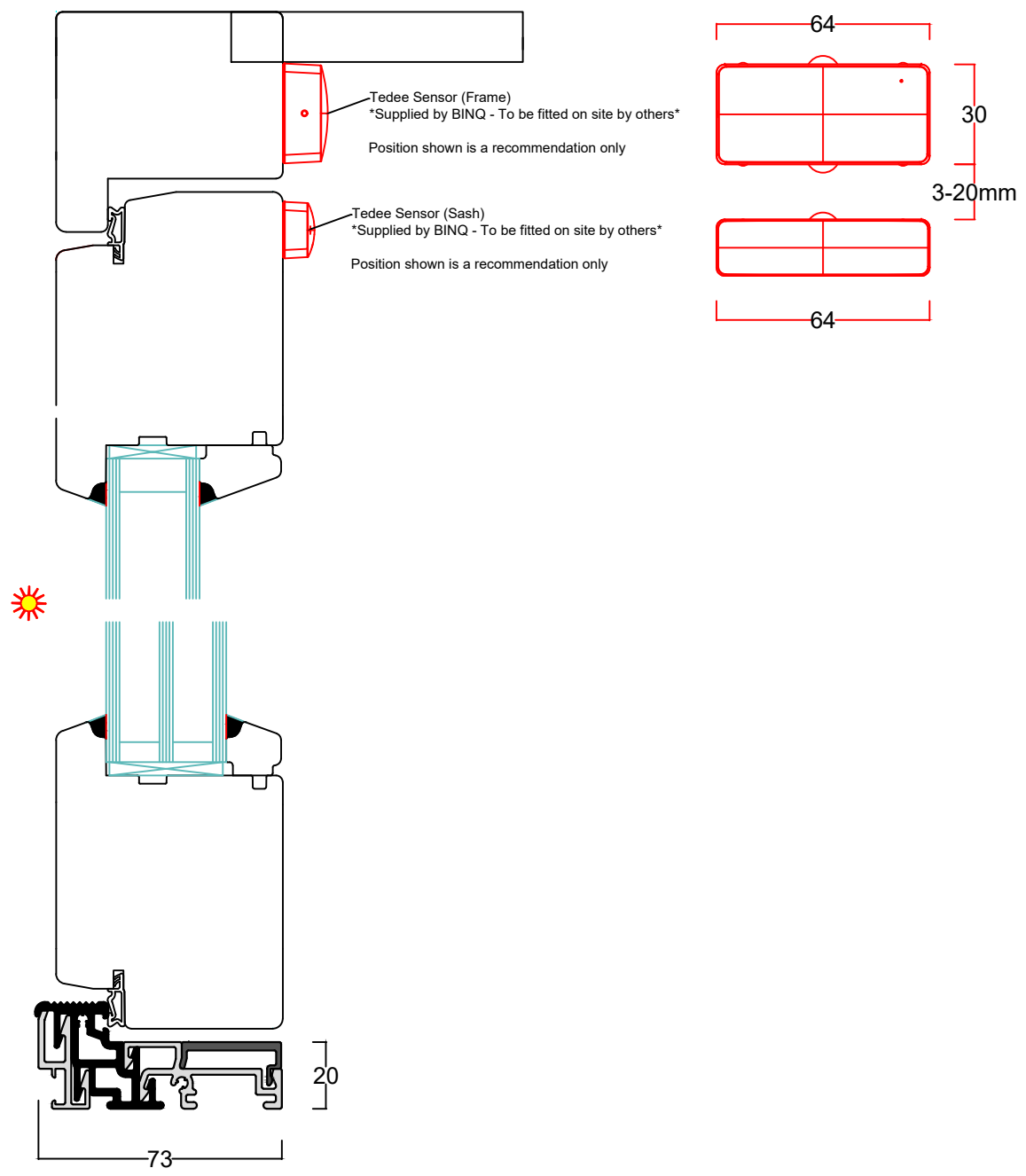

Always ensure you have access to key provided for manual override in case of automation failure

Recommended Accessories:

- Tedee Keypad (Supplied loose, to be fitted on site by others)
  - Ability to use secure pin number or fingerprint scanning
  - Ability to lock the door by entering pin or "Tick" button
- Tedee Door Sensor (Supplied loose, to be fitted on site by others)
  - Adds ability to check door open or closed status in Tedee app
  - Adds auto-lock and auto-unlock function
- Tedee Wifi Bridge (Supplied loose, to be fitted on sit by others)
  - Adds ability for remote control (off premisis use) of Tedee lock without bluetooth

All dimensions, opening configurations, installation details and specifications are to be confirmed by the client/builder. The purpose of the included drawings are for illustration assistance ONLY in order to help determining custom designs and installation methods. ALL details are to be confirmed and signed off by clients/builders.
BINQ Pty Ltd is responsible for including the correct information and depiction of the door and window systems being sold. Any items that are not part of BINQ's standard offer may be present within this drawing but are NOT included in any order pricing or processing

BQ-2.9